Quick Installation Guide

MultiPlus-II 12V 3000VA 2x120Vac

www.victronenergy.com

Included

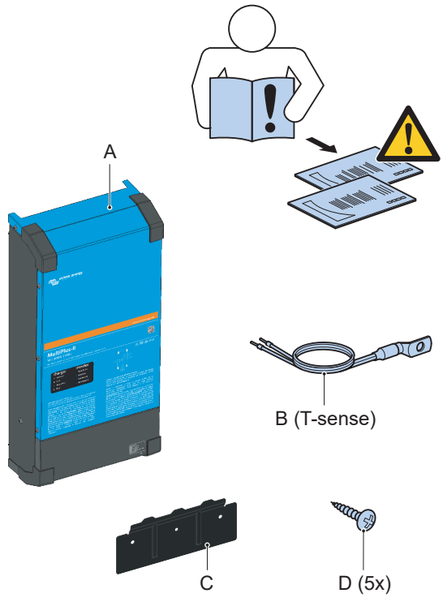

For fuse values:
refer to the user manual

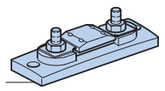

Fuse (not included)

Not included

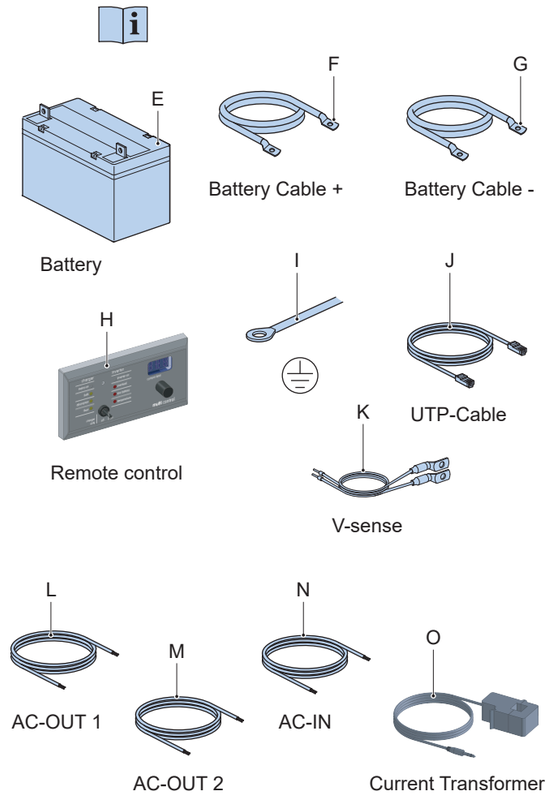

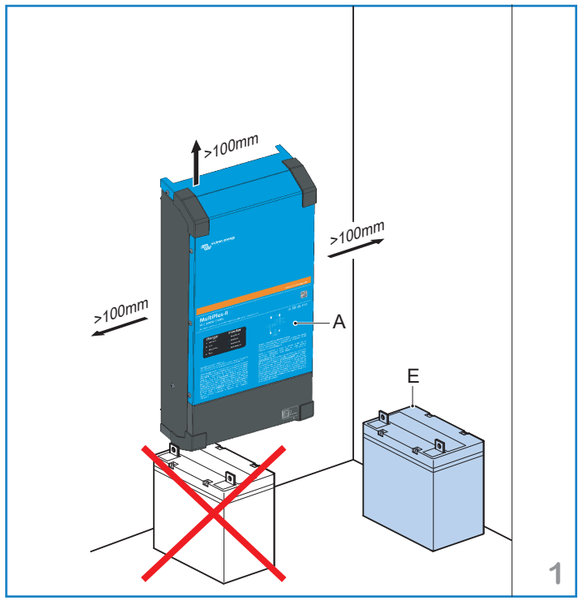

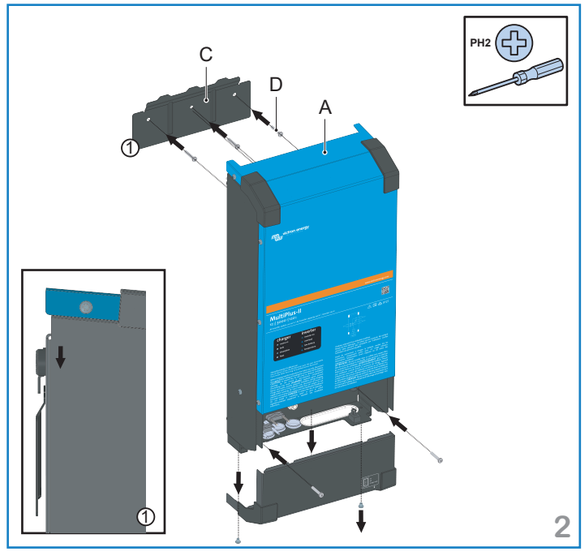

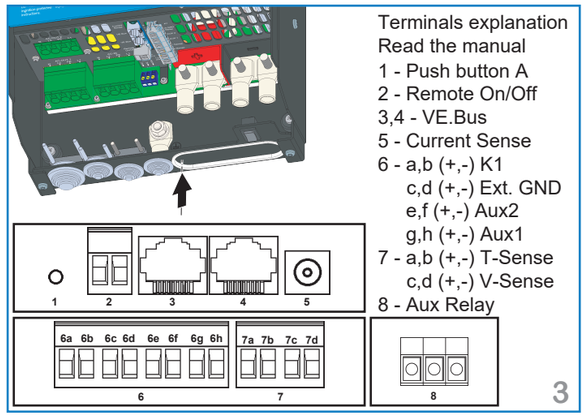

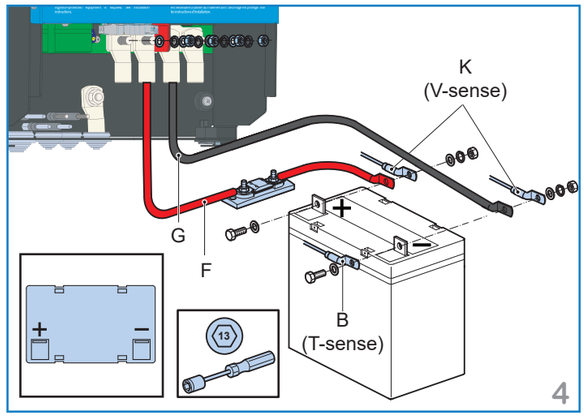

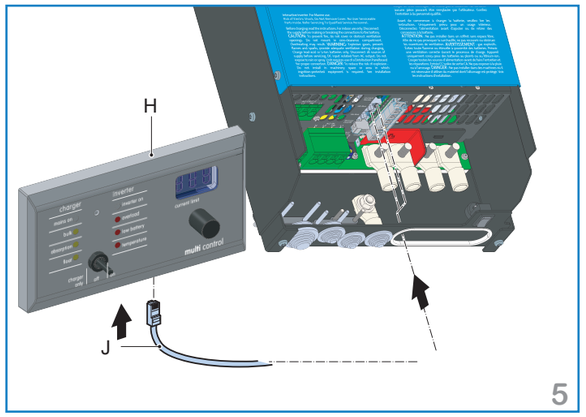

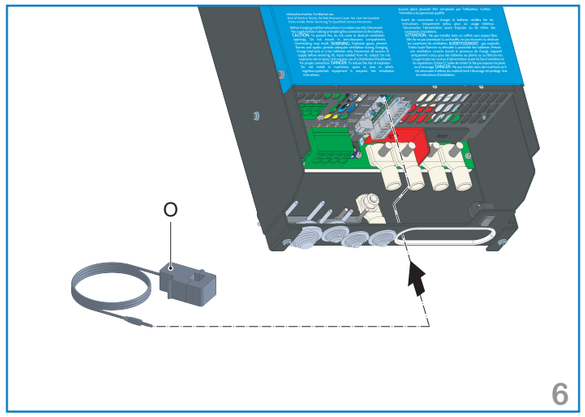

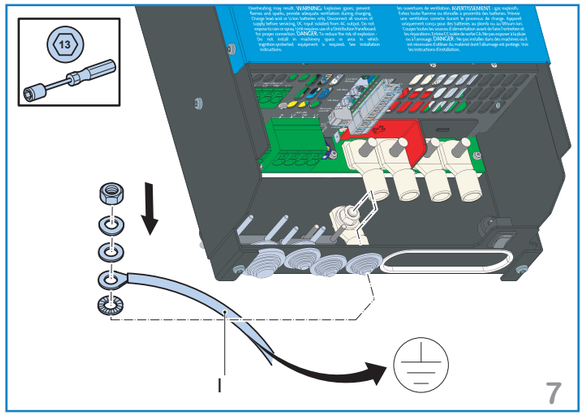

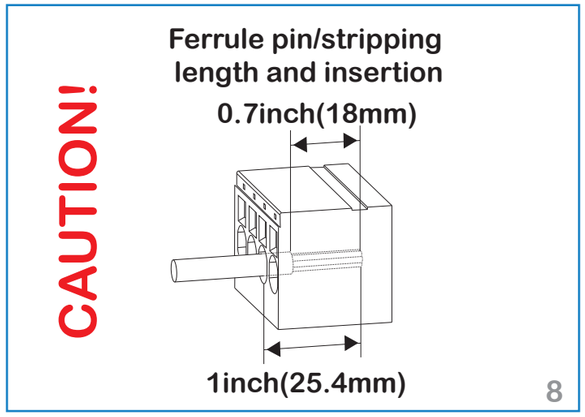

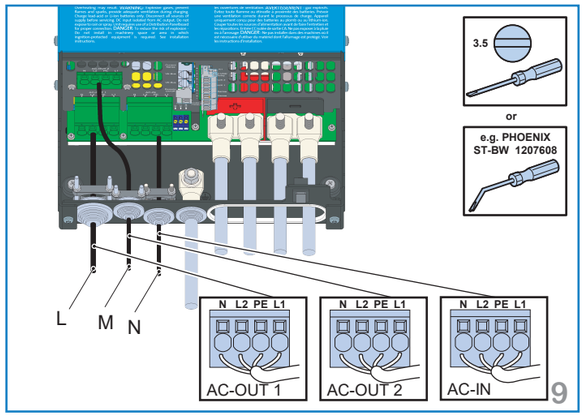

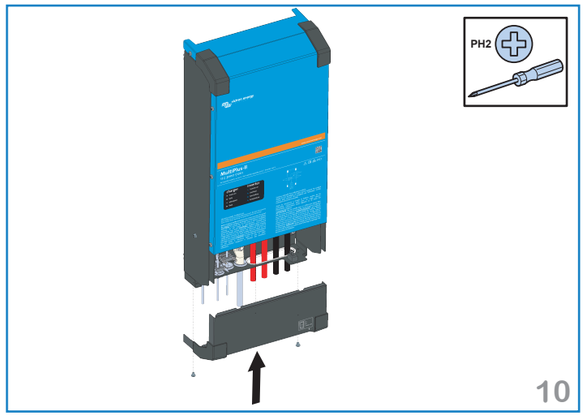

Rev.02